Rev:C

0130A17100201P

Circulator

1-2GHz 17dB A:100W I/L0.7dB VSWR:1.35 SMA CW Circulator

Features

- Optional removable connectors for assembly integration
- Low VSWR
- High Isolation

Electrical Specifications

Frequency	1-2GHz
Isolation	16dB(Min.)
VSWR	1.4:1(Max.)
Insertion Loss	0.7dB(Max.)
Impedance	50Ohm
Power	Forward:100W(CW)
	Reverse:20W
Connection	SMA Female
Direction	Clockwise

Mechanical

Durability	500 Cycles

Environmental

Operating Temperature	0~60℃

Test Report

Return Loss

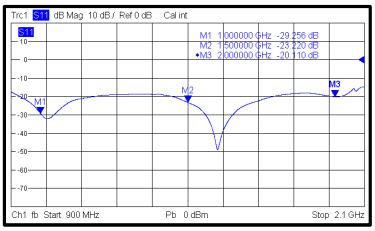

VSWR

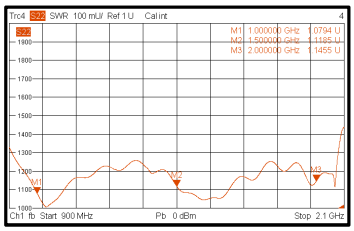

Insertion Loss

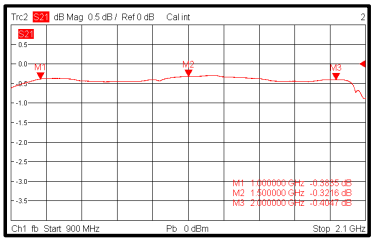

Isolation

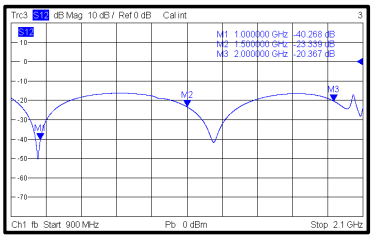

Outling Drawing (Unit:mm)

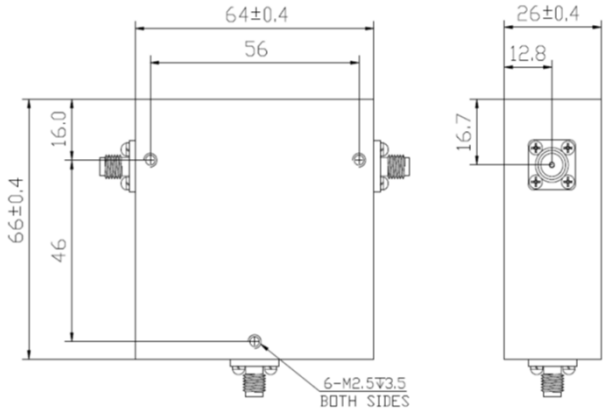

All Specification Changed Without Notification.

Web:http://www.woken.com.tw Web: http://www.wokentech.com E-Mail: sales@woken.com.tw