Rev:H

# 0110A05601O-XX

## Directional Coupler

## 0.5-6GHz SMA 50W Directional Coupler

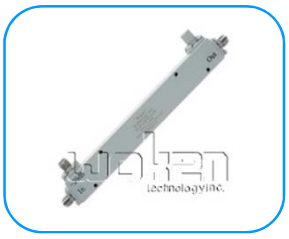

### Features

- Miniature Size
- High Directivity
- Low VSWR
- Stripline Construction

### Electrical Specifications

| | |
|---|---|
| Frequency | 0.5-6GHz |
| Coupling Avaliable: | 10,20,30dB |
| Coupling Accuracy | ±1dB |
| Coupling Sensitivity | 10dB:±0.7dB<br>20dB:±0.8dB<br>30dB:±1.0dB |
| Insertion Loss (Theoretical Insertion Loss not included) | 0.7dB(Max.) |
| VSWR | 10,20dB1.2:1(Max.)<br>30dB:1.25:1(Max.) |
| Directivity | 18dB(Min.) |
| Input Power | 50W |
| Impedance | 50Ohm |
| Connection | SMA |

### Mechanical

| | |
|---|---|
| Durability | 500 Cycles |

### Environmental

| | |
|---|---|
| Operating Temperature | -40℃~80℃ |

### Material

| Part | Material | Plated |
|---|---|---|
| Housing | Aluminum | Grey |
| Connector Body | Stainless Steel | |

### Outling Drawing (Unit:mm) Tolenrances:±0.3

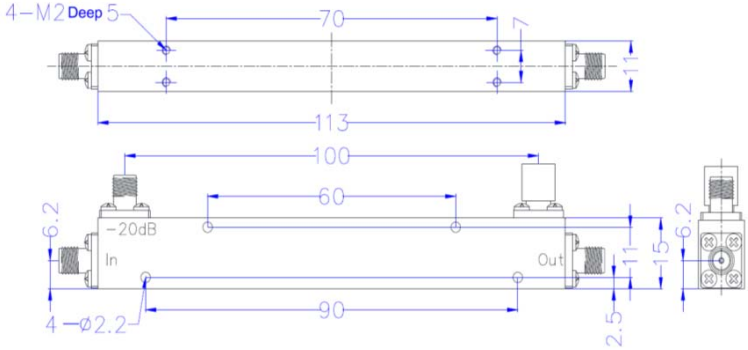


### Test Report

20dB:

Insertion Loss

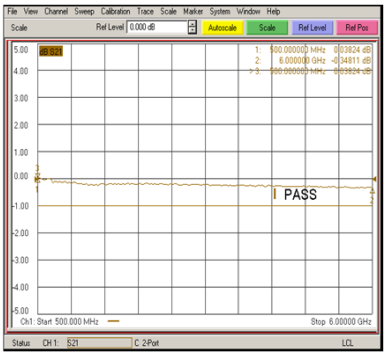


Coupling/VSWR

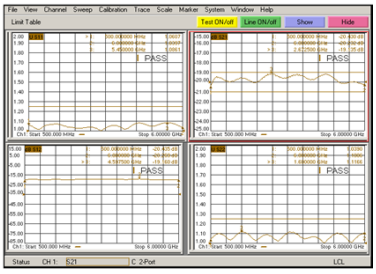

Directivity

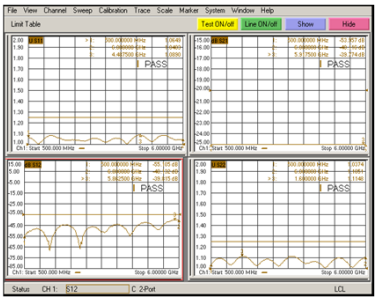

All Specification Changed Without Notification.