Rev:A

# 002W0CA3GCA01L

# Connector

## 6GHz SMA(M)90° ,G, for RG316 Crimp Connector

## Features

- High Repeatability
- Low VSWR

## Electrical Specifications

| | |
|---|---|
| Frequency | DC-6GHz |
| VSWR | 1.3:1(Max.) |
| Impedance | 50Ohm |
| Connection | SMA Male |

## Mechanical

| | |
|---|---|
| Durability | 500 Cycles |
| Mating | 1/4-36 Thread coupling |
| Mating Torque | Recommended:80-110N.cm |
| | Max.:170N.cm |

## Environmental

| | |
|---|---|
| Operating Temperature | -65℃~155℃ |
| Vibration | MIL-STD-202 Meth.204 |
| Corrosion | MIL-STD-202 Meth.101(5% salt solution) |

## Material

| Part | Material | Plated |
|---|---|---|
| Body | Brass | Gold |
| Center Pin | Brass | Gold |
| Insulator | Teflon | |
| Gasket | Silicone Rubber | |
| C-Ring | Beryllium Copper | |
| Cover | Brass | Gold |
| Ferrule | Brass | Gold |

## Outling Drawing (Unit:mm ) Tolerance:X=±0.2 ,X.X=±0.1, X.XX=±0.05

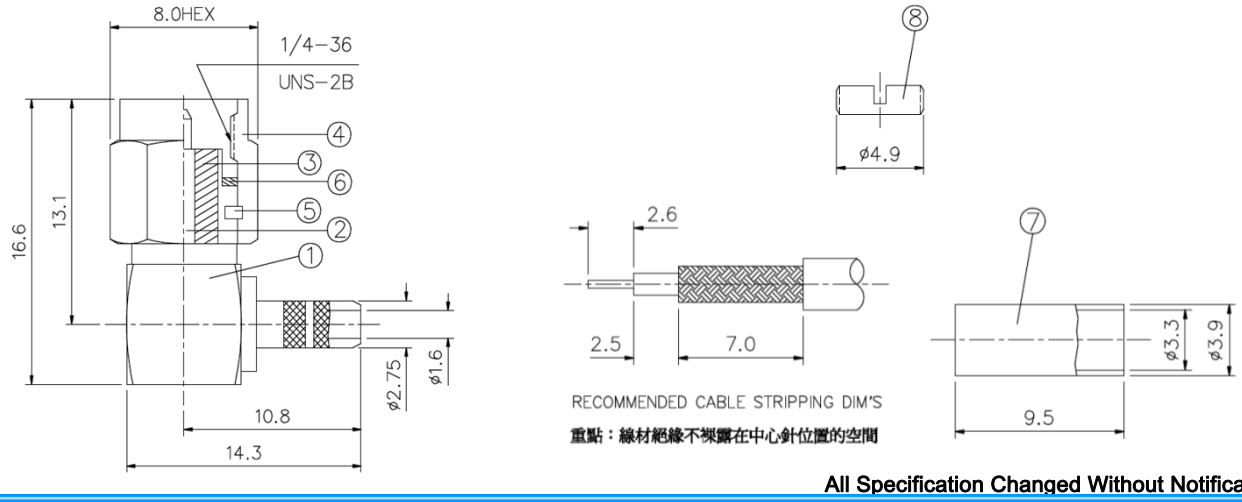


All Specification Changed Without Notification.