Rev:D

00200CA2GF502L

Connector

12.4GHz SMA(F)180° ,G,4Hole Flange Connector

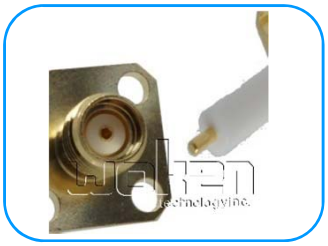

Features

- High Repeatability
- Low VSWR

Electrical Specifications

Frequency	DC-12.4GHz
VSWR	1.3:1(Max.)
Impedance	50Ohm
Connection	SMA Female

Mechanical

Durability	500 Cycles
Mating	1/4-36 Thread coupling
Mating Torque	Recommended:80-110N.cm
	Max.:170N.cm

Environmental

Operating Temperature	-65℃~155℃
Vibration	MIL-STD-202 Meth.204
Corrosion	MIL-STD-202 Meth.101(5% salt solution)

Material

Part	Material	Plated
Body	Brass	Gold
Center Pin	Beryllium Copper	Gold
Insulator	Teflon	

Outling Drawing (Unit:mm) Tolerance:X=±0.2 ,X.X=±0.1, X.XX=±0.05

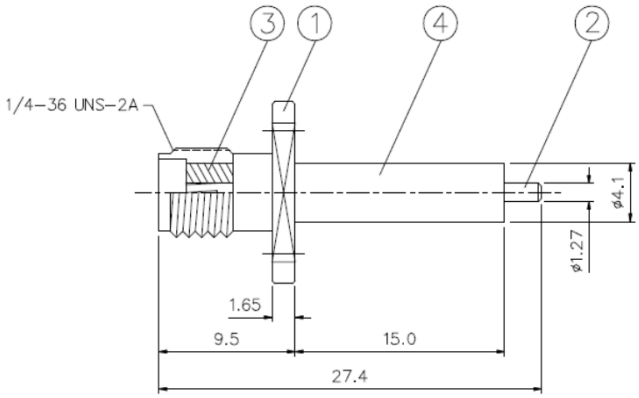

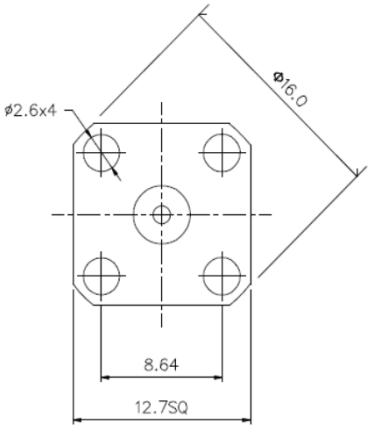

All Specification Changed Without Notification.