Features:

High Repeatability

RoHS Compliant

Specifications:

Electrical:

Frequency:DC-12.4GHz

Impedance: 50Ohm

VSWR:1.3:1(Max.)

Connection:SMA Female

Woking voltage: 170 Vrms Max.

Deilectric withstanding voltage: 500 Vrms Max.

Insulator resitance: 5000M ohm Min.

Mechanical:

Durability:500 Cycles

Environmental:

Temperature: -65℃~155℃

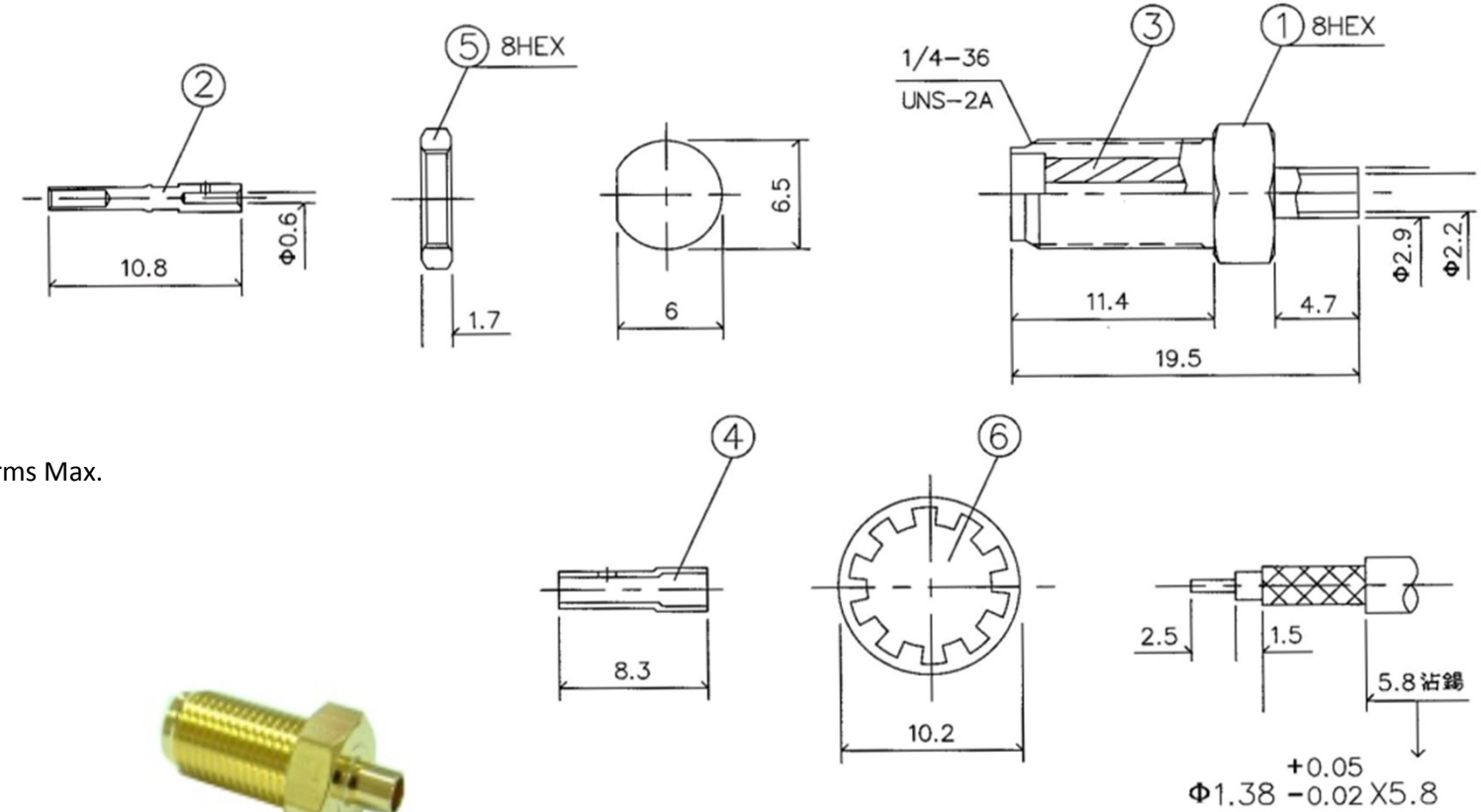

Material:

Part	Material	Plated
Body	Brass	Golden Flash
Center Contact	BeCu	Gold 20u"
Insulator	Teflon	

UNLESS OTHERWISE SPECIFIED ALL DIMENCIONS ARE IN mm AND TOLERANCES ARE:

INTEGRAL DIMENSIONS ± TOLINT: x ±0.38, .xx ±0.15, .x ±0.25, .xx x ±0.05

ANGULAR DIMENSIONS ±TOLANG: HOLES UNDER Ø5.0 ±0.05

THIRD ANGLE PROJECTION

DRAWN	Terence	11/30/12'
ENGR	Jack	11/30/12'
APVD	James	11/30/12'

Woken Technology Inc.

CODE

DWG TITLE: 12.4GHz SMA(F)180°,G,for RG178,196 Crimp Connector

SIZE A4

REV B

DWG NO. 00200CA2GCC01L